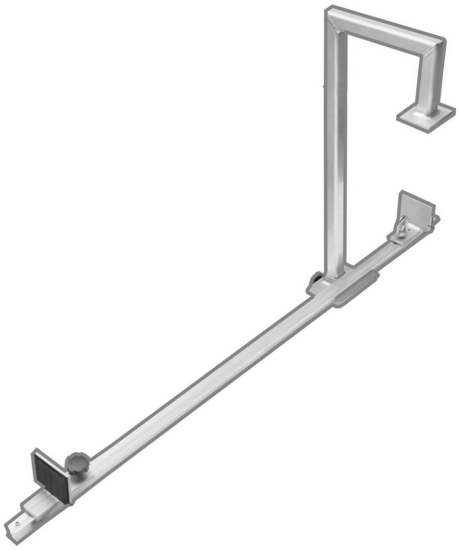

Anchor beam for skylights

Adjustable anchor bar

The **anchor bar for skylights and dormer windows** according to EN 795B, with adjustable length from 30 to 127 cm.

The adjustable anchor bar is a PPE suitable for use by one person and provides a quick, safe and **easy to install temporary anchorage point** by using the opening of dormer windows as a support structure.

TECHNICAL SPECIFICATIONS

- Usable width: 30 to 127 cm
- Useful height: from 0 to 550 mm
- Suitable for one person
- Standard EN 795B

Tabelle der Artikelvarianten

Art./Item	Apertura (mm.)
27903	300 - 1270